RC10 B6.3 TEAM KIT

Driver:	Neil Cragg	Event:	
Date:	28/11/21	Track:	Worksop
Qualify:		TQ: ■ Main: A	Finish: 1st Best Lap Time: N/A

Front Suspension:

Reset Forms

Ride Height:	19mm
Camber:	-1
Toe:	0
Anti-Roll Bar:	N/A
Arm Type:	Gullwing (Hard)
Tower Type:	Gullwing
Wheel Hex:	Kit
Steering Block:	4
Caster Block Insert:	5*
Bulkhead Type:	Brass
Kick-Up Angle:	25*
Notes:	

Bump Steer Spacing: 0

Ball Stud Spacing: 2

Axle Height:
+3 ☐
+2 ☐
+1 ■
0 ☐

Steering Plate: +1

Steering Stop Spacing: N/A

Ball Stud Spacing: 2mm

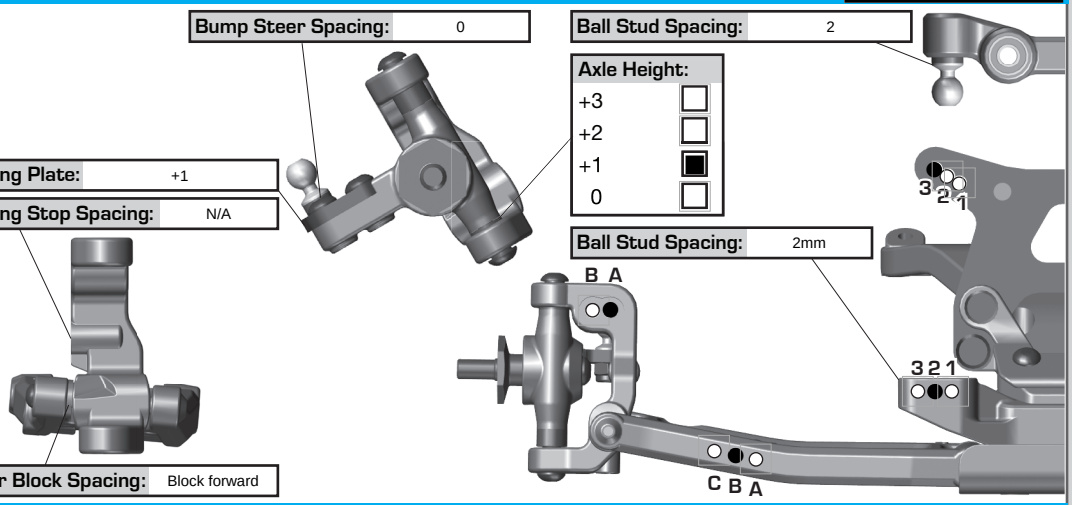

Caster Block Spacing: Block forward

Rear Suspension:

Ride Height:	19mm
Camber:	-2
Anti-Roll Bar:	No
Arm Type:	73mm (soft)
Tower Type:	#91770
Arm Spacing:	Arms back
Wheel Hex:	5.0mm
Shock Mounting Position:	Front of Arm ■ Rear of Arm ☐
Hub Spacing:	Fwd ■ Mid ☐ Back ☐
CVA Bone Length:	69mm
CVA Axle Type:	Kit
Notes:	

C Mount: Aluminum ■ Brass ☐

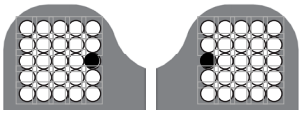

D Mount: Aluminum ■ Brass ☐

Axle Height:

	▼0	3▲	+3
	▼1	2▲	+2
	▲1	2▼	+1
	▲0	3▼	+0

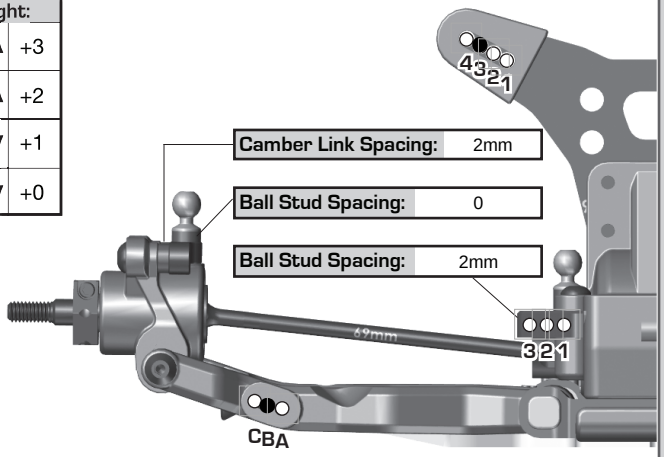

Camber Link Spacing: 2mm

Ball Stud Spacing: 0

Ball Stud Spacing: 2mm

Electronics:

Radio:	Sanwa	Servo:	Sanwa
EPA:	Throttle: %	Brake: %	
ESC:			
ESC Settings:			
Motor:	Reedy		
Wind:	6.5	Timing:	20*
Pinion:	23	Spur:	78
Battery:	Reedy 4100mah		
Battery Position:	4		
Battery Weight:	56g		

Drivetrain:

Transmission: Laydown: ■ Layback: ☐

Differential: Ball Diff: ■
Height: 3 Gear Diff: ☐
Gear Diff Mass:

Notes:

Slipper Clutch:

Type:	Kit
# of Pads:	2
Setting:	

Shocks:

	Front	Rear
Piston:	1.6 thin (AE)	1.7 thin (AE)
Fluid:	30w	27w
Spring:	White V2	White V2
Limiters:	Int: 0 Ext: 0	Int: 0 Ext: 0
Stroke:	22.2mm	27.5mm
Eyelet Length:	Long	Long
Cup Offset:	+5	+5

Notes: 31mm kashima bodies (rear), FT shafts

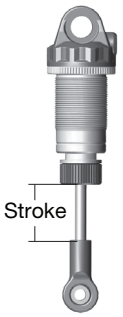

Track Info:

Size:	Small ☐	Medium ■	Large ☐	Extra Large ☐
Surface:	Dirt ☐	Carpet ☐	Astroturf ☐	Multi Surface ■
Traction:	Low ☐	Medium ■	High ☐	Very High ☐
Moisture:	Dry ■	Damp ☐	Wet ☐	
Condition:	Indoor ■	Outdoor ☐	Dusty ☐	Hard Packed ☐
	Bumpy ☐	Grooved ☐	Smooth ☐	Loamy ☐
Temperature:	Ambient:	Track:		
Notes:				

Tires:

Front Tires:	Honeycomb
Front Compound:	Yellow
Front Insert:	Cragg
Rear Tires:	Honeycomb
Rear Compound:	Yellow
Rear Insert:	Cragg
Wheel (F/R):	AE
Notes:	

Body, Weight:

Body:	Proline Axis
Front Wing:	Kit
Rear Wing:	Kit
Wing Angle:	3*
Chassis Length:	B6.3D
Servo Weights:	Steel
Electronic Weights:	Steel
Total Vehicle Weight:	

Vehicle Comments:

:: For more setups, visit RC10.com and click on "Setup Sheets"